YTP D1TP D1ZP YGP

变频调速三相异步电动机

VARIABLE VOLTAGE FREQUENCY 3-PHASE ASYNCHRONOUS MOTORS

DALMO 系列电机

YTP、D1TP系列变频调速三相异步电动机

YTP/D1TP SERIES VARIABLE VOLTAGE FREQUENCY 3-PHASE ASYNCHRONOUS MOTORS

概述　General Introduction

YTP、D1TP系列变频调速三相异步电动机是以变频调速装置为供电电源的变频调速三相异步电动机，与变频装置组成的系统能够实现无级调速，达到节能和控制自动化的目的。

YTP系列变频调速电动机是在公司原YSPA系列变频调速电动机基础上改进设计的更新换代产品。具有效率高、调速范围广、精度好、运行稳定、操作和维修方便等特点。适用于驱动轧钢、起重、运输、机床、印染、造纸、化工、纺织、制药等要求连续调速和频繁正反转的各种机械设备上，可与国内外各种变频装置配套使用。

D1TP在YTP基础上改进了外观设计提高了防护等级并进一步降低了噪音，是一种高品质的变频调速电动机，主要用于替代同类型的进口电机或为出口设备配套。

电动机基本技术要求符合IEC34-1和GB755标准的要求，安装尺寸符合IEC72国际标准。

电动机可附加热保护器、加热带、编码器、电磁制动器、超速开关及测速发电机等附加装置，以满足用户配套要求。

YTP/D1TP series variable voltage variable frequency 3-phase asynchronous motors are driven by varible frequency inverters. The system comprising of a frequency inverter can give step-less speed regulation, and enable energy saving and automatic control.

YTP series variable voltage variable frequency motors are improved based on the existing YSPA series motors. It features high efficiency, wide rang of regulating speeds, high precision, reliable, and convenient operation. It is suitable for driving variors equipment that requires continuous speed regulation in areas, such as, steel rolling, travelling cranes, machine tools, papermaking, the chemical industry, spinning industry, pharmaceutical industry, etc. can be equiped with most kinds of the frequency controlling applications from both domestic and overseas. On the base of D1TP series frequency controlling electric motor, YTP series variable frequency and voltage controlling electric motor are improved as even higher in degree of the protection,lower in noise, the superior products which can be adpoted in place of the same products imported, or to be equiped with the equipments to be exported.

The based requirements of YTP motors is compling with the standard IEC 34-1 and GB755. Their mounting dimensions conform with the standard IEC72.

YTP系列变频调速三相异步电动机
YTP Series Variable Voltage&Frequency Control Electric

D1TP系列变频调速三相异步电动机
D1TP Series Variable Voltage&Frequency Control Electric Motor

型号说明 Symbol explanation

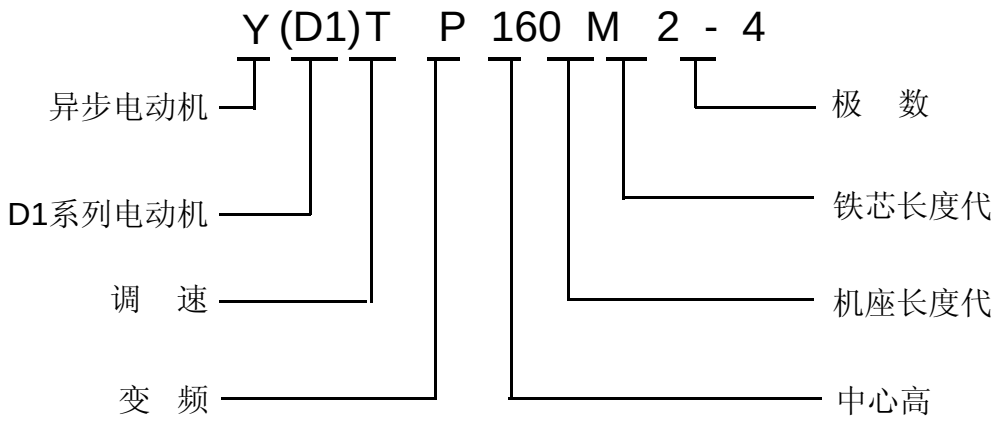

结构及安装型式 Constructure And Mounting Arrangem

YTP、D1TP系列变频电机共有如下三种基本结构型式：

There are three basic constructional mounting arrangements for series YTP motors:

B3：机座带底脚、端盖上无凸缘的结构型式。
B3：Frame with feet, end bracket without flange.
B5：机座不带底脚、端盖上带凸缘的结构型式。
B5：Frame without feet, end bracket with flange whose diameter is greater than that of the frame.
B35：机座带底脚、端盖带凸缘的结构型式。
B35：Frame with feet, end bracket with flange whose diameter is greater than of the frame.
常用结构安装型式与适用的机座号见表1。
The commonly used mounting arrangements and the corresponding frame numbers are shown in table 1.

表1 Table 1

机座 中心高 Centre height	基本安装结构型式 Basic			派生的安装型式 Variations								
	B3	B5	B35	采用B5型 Based on B5		采用B3 Based on B3					采用B35型 Based on B35	
				V1	V3	V5	V6	B8	B6	B7	V15	V36
80-160M1	√	√	√	√	√	√	√	√	√	√	√	√
160M2-225	√	√	√	√	–	–	–	–	–	–	–	–
250-355	√	–	√	√	–	–	–	–	–	–	–	–

使用条件及其性能 Working conditions and performance

- 适应变频器输出的高载波频率电压。
  Has the adaptability to high carrier frequency voltage suppliece by inverter.
- 额定电压380V，额定频率50Hz。
  The rated power supply is 380V 50Hz.
- 绝缘等级F级，防护等级IP44、IP54、IP55。
  The insulation class is F, the protection degree is IP44 or IP54 or ip55.
- 以连续工作（S1）制为基准的连续定额。
  They are rated for continuous duty(S1).
- 调速范围3Hz-100Hz；3-50Hz为恒转矩运行，50-100Hz为恒功率运行。
  The speed adjustable continously in the range of 3-100Hz; 3-50Hz for constant torque operation, and 50-100Hz for constant out-put opration.
- 海拔不超过1000m，相对湿度不大于90%。
  The altitude of 1000m above sea level. Relative humidity is less than 90%.
- 冷却方式：112-160M1机座号为自扇冷(IC411)，160M2-355机座号为他扇冷(IC416)。
  Mode of cooling: Frame 112-160M1 cooling use form of fan cooling(IC411).
  Frame 160M2-355 cooling use form of Separate-cooling(IC416).
- 3kW及以下为Y接法，4kW及以上为△接法。
  Y connection for motors up to 3kW, △connection 4kW and upwards.
- 额定电压、频率时，能承受额定转矩2倍过载历时1min。
  At the rated voltage and frequency, the motor can bear 2 times overload of the rated torque lasts 1 min.

运行特征 Performance

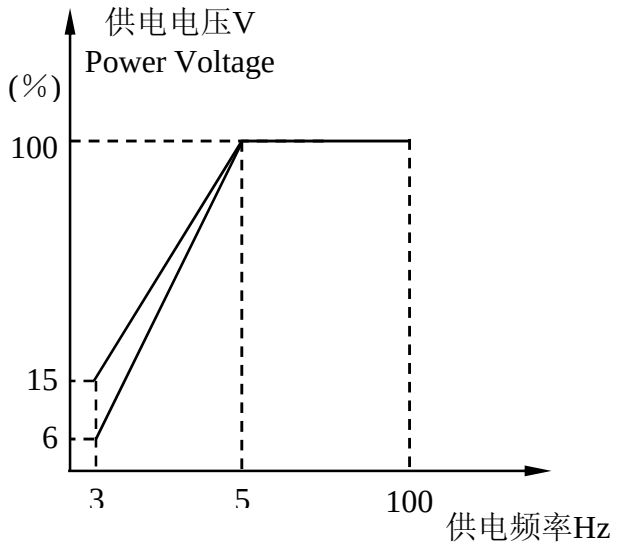

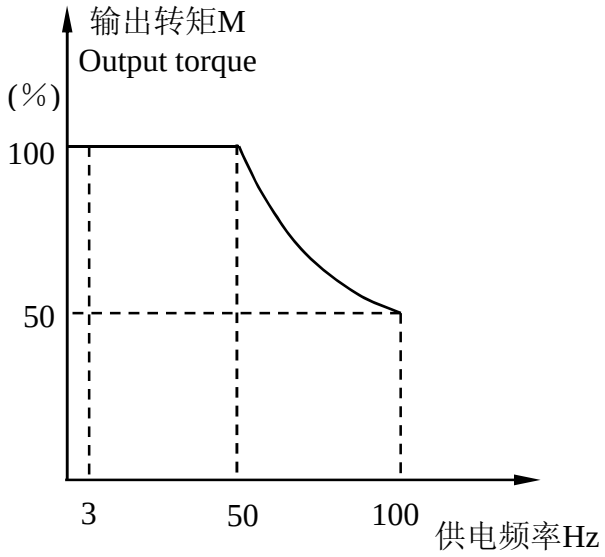

技术数据 Performance data

主要技术数据见表2 Main performance data are show in table 2.

表2 Table 2

型号 TYPE YTP D1TP	额定功率 Rated Output kW	额定电流 Rated Current A	额定输出转矩 Rated output torque N.m	额定转速 Rated speed r/min	堵转转矩/额定转矩 Locked Torque/Rated Torque	最大转矩/额定转矩 Max Torque/Rated Torque	转动惯量 Moment of inertia Kg.m2	净重 Net weight kg
801-4	0.37	1.2	2.54	1390	1.25-2.0	3.5	0.0018	17
802-4	0.55	1.6	3.78	1390	1.25-2.0	3.5	0.0021	18
90S-4	0.75	2.1	5.12	1400	1.25-2.0	3.5	0.0021	22
90L-4	1.1	2.9	7.5	1400	1.25-2.0	3.5	0.0027	27
100L1-4	1.5	3.8	10	1430	1.25-2.0	3.5	0.0054	34
100L2-4	2.2	5.2	14.7	1430	1.25-2.0	3.5	0.0067	38
112M-4	3.0	7.0	19.9	1440	1.25-2.0	3.5	0.0095	43
132S-4	4	9.5	26	1440	1.25-2.0	3.5	0.0214	68
132M-4	5.5	12.2	36	1440	1.25-2.0	3.5	0.0296	81
160M1-4	7.5	18	48	1460	1.25-2.0	3.5	0.0747	123
160M2-4	11	23	72	1460	1.25-2.0	3.5	0.0921	114
160L-4	15	31	98	1460	1.25-2.0	3.0	0.112	120
180M-4	18.5	37	120	1470	1.25-2.0	3.0	0.139	187
180L-4	22	42	140	1470	1.25-2.0	3.0	0.158	195
200L-4	30	57	193	1470	1.25-2.0	3.0	0.263	280
225S-4	37	70	236	1480	1.25-2.0	3.0	0.406	289
225M-4	45	86	287	1480	1.25-2.0	3.0	0.469	325
250M-4	55	103	352	1480	1.25-2.0	3.0	0.66	427
280S-4	75	140	480	1480	1.25-2.0	3.0	1.12	572
280M-4	90	164	577	1480	1.25-2.0	3.0	1.46	677
315S-4	110	214	701	1490	1.25-2.0	3.0	3.11	1025
315M-4	132	251	842	1490	1.25-2.0	3.0	3.62	1135
315L1-4	160	298	1020	1490	1.25-2.0	3.0	4.13	1190
315L2-4	200	369	1282	1490	1.25-2.0	3.0	4.94	1395
355M1-4	220	400	1408	1485	1.25-2.0	3.0	7.41	1660
355M2-4	250	1450	1592	1485	1.25-2.0	3.0	7.62	1720
355L-4	315	560	2007	1485	1.25-2.0	3.0	7.71	1870
90S-6	0.55	2.5	5.8	910	1.25-1.8	3.0	0.0029	23
90L-6	0.75	3.3	7.9	910	1.25-1.8	3.0	0.0035	25
100L-6	1.1	4.2	11.2	940	1.25-1.8	3.0	0.0069	33
112M-6	1.5	4.5	15.2	940	1.25-1.8	3.0	0.0138	45
132S-6	2.2	7	21	960	1.25-1.8	3.0	0.0286	63
132M1-6	3.0	7.5	30	960	1.25-1.8	3.0	0.0357	73
132M2-6	4.0	10.5	39	960	1.25-1.8	3.0	0.0449	84
160M1-6	5.5	13	53	970	1.25-1.8	3.0	0.0881	109
160M2-6	7.5	18	73	970	1.25-1.8	3.0	0.0932	114
160L-6	11	26	107	970	1.25-1.8	3.0	0.116	120
180L-6	15	32	146	970	1.25-1.8	3.0	0.207	200

表2　Table 2

型号 TYPE YTP D1TP	额定功率 Rated Output kW	额定电流 Rated Current A	额定输出转矩 Rated output torque N.m	额定转速 Rated speed r/min	堵转转矩/额定转矩 Locked Torque/Rated Torque	最大转矩/额定转矩 Max Torque/Rated Torque	转动惯量 Moment of inertia Kg.m2	净重 Net weight kg
200L1-6	18.5	37	182	970	1.25-1.8	3.0	0.315	230
200L2-6	22	45	217	970	1.25-1.8	3.0	0.360	260
225M-6	30	60	291	980	1.25-1.8	3.0	0.547	297
250M-6	37	70	360	980	1.25-1.8	3.0	0.834	408
280S-6	45	85.5	438	980	1.25-1.8	3.0	1.39	546
280M-6	55	104	536	980	1.25-1.8	3.0	1.65	605
315S-6	75	150	720	990	1.25-1.8	3.0	4.11	1030
315M-6	90	178	862	990	1.25-1.8	3.0	4.78	1110
315L1-6	110	220	1055	990	1.25-1.8	3.0	5.45	1185
315L2-6	132	260	1270	990	1.25-1.8	3.0	6.12	1240
355M1-6	160	300	1535	990	1.25-1.8	3.0	7.83	1620
355M2-6	200	0.372	1920	990	1.25-1.8	3.0	7.9	1730
355L-6	250	461	2390	990	1.25-1.8	3.0	8.2	1820
400L-6	315	550	3020	995	1.25-1.8	3.0	33.3	2485
132S-8	1.5	5.4	20	710	1.25-1.6	3.0	0.0314	63
132M-8	2.2	6.0	30	710	1.25-1.6	3.0	0.0395	79
160M1-8	4.0	10	53	720	1.25-1.6	3.0	0.0931	119
160M2-8	5.5	13.5	73	720	1.25-1.6	3.0	0.094	130
160L-8	7.5	18	99	720	1.25-1.6	3.0	0.126	145
180L-8	11	25	144	730	1.25-1.6	3.0	0.203	184
200L-8	15	34	196	730	1.25-1.6	3.0	0.339	250
225S-8	18.5	44	242	730	1.25-1.6	3.0	0.491	266
225M-8	22	52	283	740	1.25-1.6	3.0	0.547	292
250M-8	30	65	386	740	1.25-1.6	3.0	0.834	405
280S-8	37	80	476	740	1.25-1.6	3.0	1.39	520
280M-8	45	98	580	740	1.25-1.6	3.0	1.65	592
315S-8	55	122	709	740	1.25-1.6	3.0	4.79	1035
315M-8	75	162	986	740	1.25-1.6	3.0	5.58	1140
315L1-8	90	192	1160	740	1.25-1.6	3.0	6.37	1195
315L2-8	110	245	1418	740	1.25-1.6	3.0	7.23	1255
355M1-8	132	270	1692	745	1.25-1.6	3.0	8.4	1660
355M2-8	160	325	2048	745	1.25-1.6	3.0	8.6	1740
355L-8	200	396	2553	745	1.25-1.6	3.0	8.8	1980
315S-10	55	106	730	587	1.35-1.8	3.0	4.78	1020
315M-10	75	129	888	587	1.35-1.8	3.0	6.36	1190
315L1-10	90	172	1210	587	1.35-1.8	3.0	7.2	1260
315L2-10	110	210	1458	590	1.35-1.8	3.0	7.5	1290
355M1-10	132	234	1789	590	1.35-1.8	3.0	12.5	1620
355M2-10	160	280	2145	590	1.35-1.8	3.0	13.7	1730
355L-10	200	339	2597	590	1.35-1.8	3.0	14.8	1970

注：1. 堵转转矩/额定转矩　为3Hz时值　Locked torque/rated torque is the value at 3Hz.
2. 最大转矩/额定转矩　为50Hz时值　Max torque/rated torque is the value at 50Hz.

外形及安装尺寸 Dimensions

YTP底脚安装
Foot mounting

B3

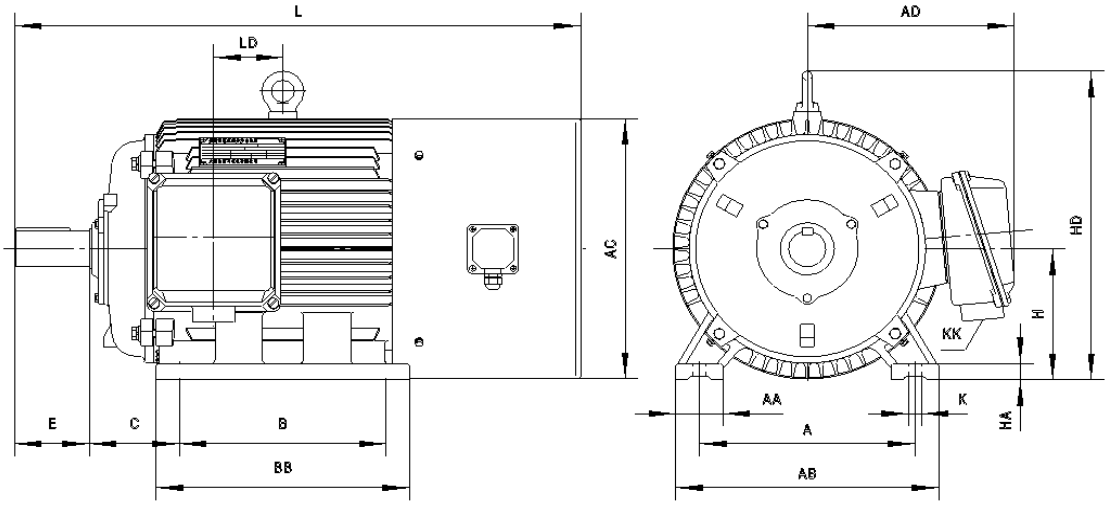

YTP发兰安装
Foot and Flange mounting

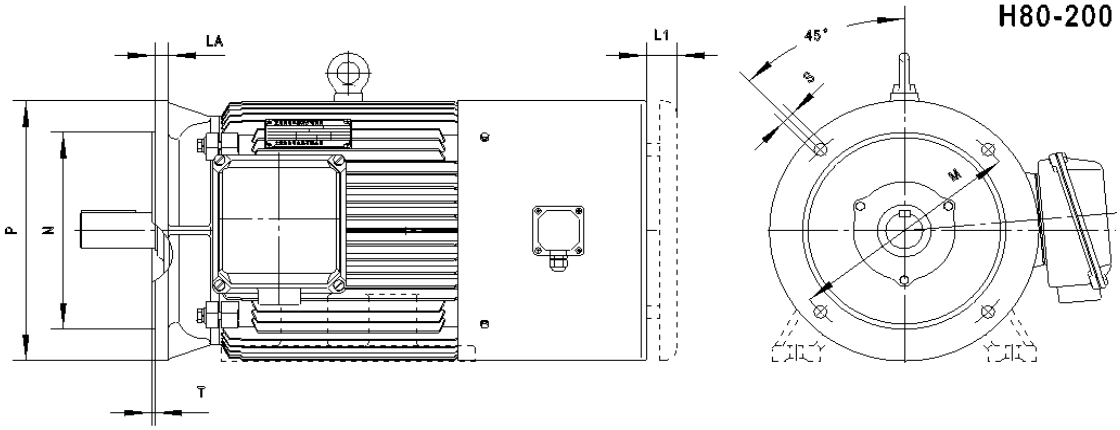

B5/B35/V1

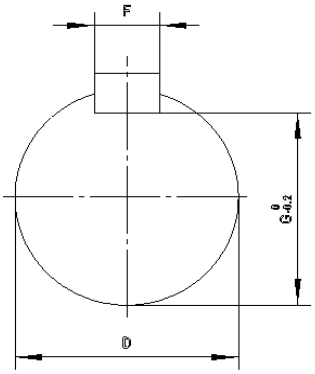

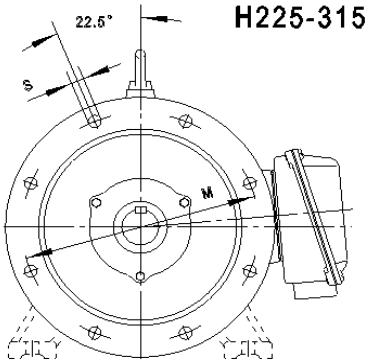

外形及安装尺寸 Dimensions

D1TP底脚安装
Foot mounting

B3

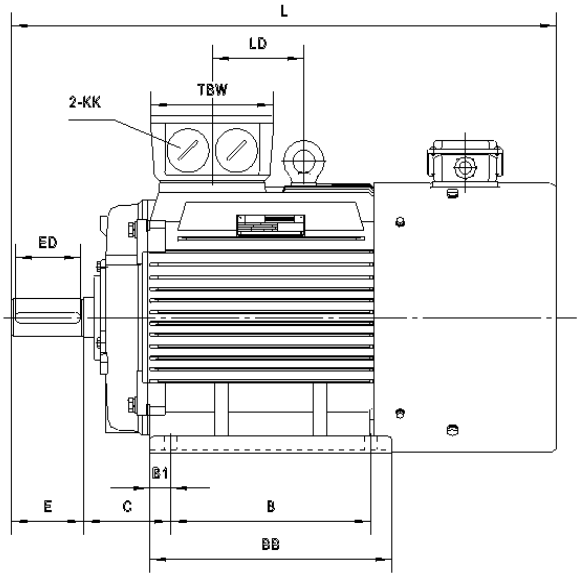

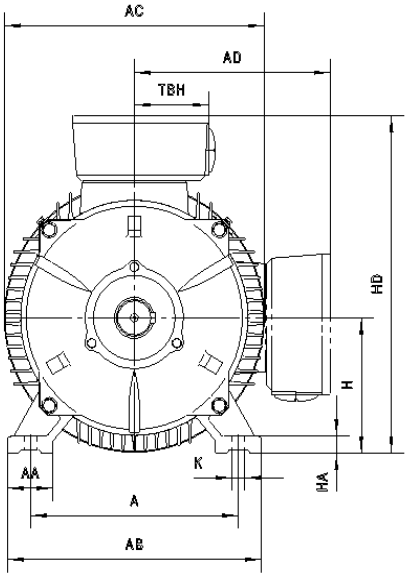

D1TP发兰安装
Foot and Flange mounting

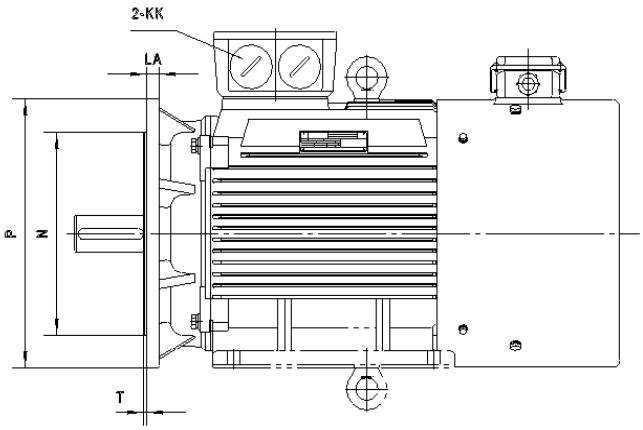

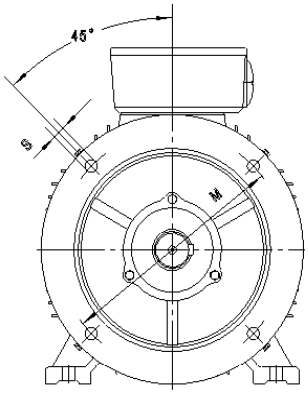

H80-200

B5/B35/V1

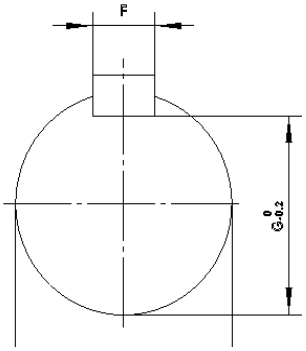

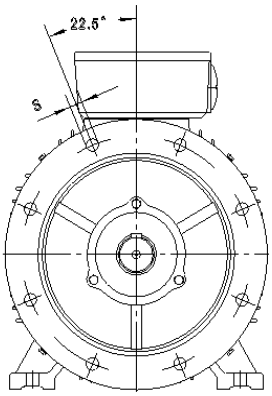

H225-315

外形及安装尺寸 Dimensions

YTP外形及安装尺寸见表3，D1TP外形及安装尺寸见表4，电动机标准轴伸为直轴伸，如需要锥形轴需在订货时指出（尺寸见表5）。电动机总长尺寸在安装附件后会有加长变化。

The YTP dimensions are shown in Table3, D1TP is shown in Table4. The normal shaft extension is straight, but the conical shaft extension is available on special order(Dimensions are shown in Table5). The overall length of the motor will increasing after installing attachment.

表3 Table 3 YTP 外形尺寸 YTP Series Overall Dimensions

机座号 Frame no.	A	AA	AB	AC	AD	B	BB	C	D	E	F	G	H	HA	HD	K	KK	L	L1	LA	LD	M	N	P	S	T
YTP80	125	37	165	165	150	100	135	50	19	40	6	15.5	80	13	170	10	M24X1.5	285		13	-	165	130	200	12	3.5
YTP90S	140		180	175	155			56	24	50	8	20	90		190			310								
YTP90L						125	160											335								
YTP100L	160	42	205	205	180	140	180	63	28	60		24	100	15	245	12	M30X2	380		15	0	215	180	250	15	4
YTP112M	190	52	245	230	190		185	70					112	17	265			400								
YTP132S	216	63	280	270	210		205	89	38	80	10	33	132	20	315			475		16		265	230	300		
YTP132M						178	243											515								
YTP160M1	254	73	330	325	255	210	275	108	42	110	12	37	160	22	385	15	M36X2	600		18	55	300	250	350	19	5
YTP160M2																		730								
YTP160L						254	320											775								
YTP180M	279		355	360	285	241	315	121	48		14	42.5	180	24	430			840	40	20	86					
YTP180L						279	353											880			105					
YTP200L	318		395	400	310	305	378	133	55		16	49	200	27	475	19	M48X2	885	45	22	102	350	300	400		
YTP225S	356	83	435	450	345	286	382	149	60	140	18	53	225		530			940			103	400	350	450		
YTP225M						311	407											965			116					
YTP250M	406	88	490	495	385	349	458	168	65			58	250	33	575	24	M64X2	1005	50	24	131	500	450	550		
YTP280S	457	93	550	555	410	368	535	190	75		20	67.5	280	38	640			1165			168					
YTP280M						419	586											1215			194					
YTP315S	508	120	640	645	576	406	610	216	80	170	22	71	315	45	865	28		1370	65	25	213	600	550	660	24	6
YTP315M						457	660											1420			238					
YTP315L						508	740											1510			283					

表4 Table 4 D1TP 外形尺寸 D1TP Series Overall Dimensions

机座号 Frame no.	A	AA	AB	AC	AD	B	BB	C	D	E	ED	F	G	H	HA	HD	K	KK	L	LA	LD	M	N	P	S	T
D1TP80	125	35	165	175	145	100	130	50	19	40	25	6	15.5	80	10	220	10	M25X1.5	295	10	115	165	130	200	12	3.5
D1TP90S	140	37	180	195	155		140	56	24	50	40	8	20	90	13	250			320	12	130					
D1TP90L						125	165												345							
D1TP100L	160	45	205	215	180	140	180	63	28	60	45		24	100	14	270	12	M32X1.5	385		145	215	180	250	15	4
D1TP112M	190		230	240	190		185	70						112		300			400		150					
D1TP132S	216	50	270	275	210		205	89	38	80	60	10	33	132	16	345			470	13	180	265	230	300		
D1TP132M						178	243												510							
D1TP160M1	254	65	320	330	255	210	260	108	42	110	90	12	37	160	20	420	15	M40X1.5	615	15	256	300	250	350	19	5
D1TP160M2																			700							
D1TP160L						254	305												740							
D1TP180M	279	70	355	380	280	241	311	121	48			14	42.5	180	22	455			745	18	272					
D1TP180L						279	348												780							
D1TP200L	318		395	420	305	305	370	133	55			16	49	200	25	505	19	M50X1.5	845	20	306	350	300	400		
D1TP225S	356	77	435	470	335	286		149	60			18	53	225	28	560			920		330	400	350	450		
D1TP225M						311	393																			
D1TP250M	406	80	490	510	370	349	445	168	65	140	110		58	250	30	615	24	M63X1.5	995	22	345	500	450	550		
D1TP280S	457	85	550	580	410	368	485	190	75			20	67.5	280	35	680			1120	23	380					
D1TP280M						419	538												1170							
D1TP315S	508	120	635	645	530	406	570	216	80	170	140	22	71	315	45	845	28		1285	24	420	600	550	660	24	6
D1TP315M						457	680												1320							
D1TP315L						508	740												1430							
D1TP355M	610	140	740	720	655	560	750	254	95	170	160	25	86	355	49	1010		M72X2	1570	25	450	740	680	800		
D1TP355L						630																				
D1TP400L	686	120	806	846	678	710	1090	280	100	210	180	28	90	400	45	1078	36		2200	26	585					

外形及安装尺寸 Dimensions

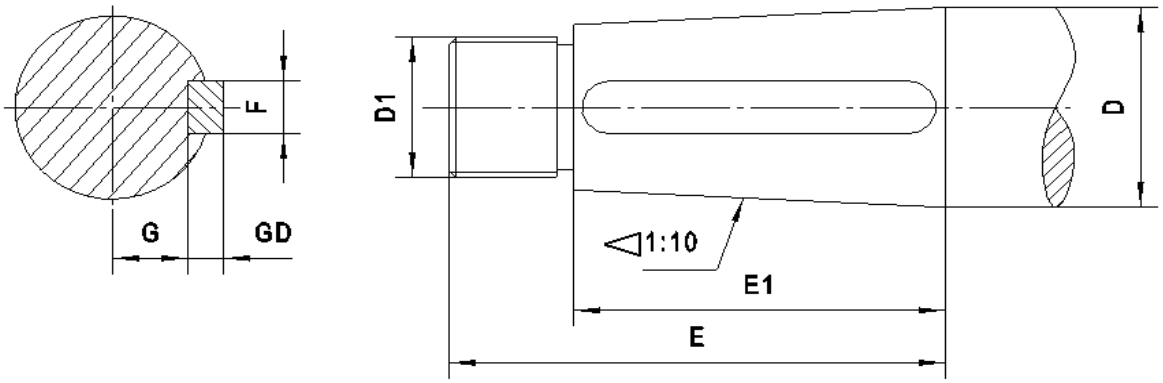

表5 Table 5

机座中心高H Centre height	D	D1	E	E1	F	G	GD
H180	55	M36×3	100	82	14	19.9	9
H200	60	M42×3	140	105	16	21.4	10
H225	65	M42×3	140	105	16	23.9	10
H250	70	M48×3	140	105	18	25.4	11
H280	85	M56×3	170	130	20	31.7	12
H315	95	M64×3	170	130	22	35.2	14
H355	110	M80×3	210	165	25	41.9	14
H400L	130	M100×3	250	200	28	50	16

注：如果用户不指定在户外使用，V1安装型式通常不设防雨帽(L1)
Note: There is no waterproofing cap for V1 if open-air surrounding is not mentioned.

订货须知 Ordering information and notices

1、订货时必须说明产品型号、额定功率、额定转速、电压及频率和安装型式等。
When ording, plase specity: type of motor, rated output, speed, voltage, frequency and mounting arrangement.
2、如有特殊要求，经双方协议后，可提供其它极数、其它结构及安装型式的电动机，也可以配带测速发电机、光电编码器、电磁制动器、电加热器、热传感器，还可以为用户研制其它额定电压、频率和频率范围的变频电动机。
If any special requirement is needed. The different pole number, construction and mounting arrangement are provide, we can also fit tachogenerator, optical encoder, electromagnetic brake and electtrical heater and heat sensor. We can also undertake design to customer's specific requirements.
3、配带超速开关通常动作设定值为100Hz时同步转速，用户可根据需要自定动作设定值，订货时提出。
The rated action data refer to the synchronous speed at 100Hz if speed-controller is supplide. Customers should provide the rated action speed of their own and indicate when they place

D1ZP系列冶金及起重用变频调速三相异步电动机

D1ZP SERIES METALLURGICAL&CRANE VARIABLE VOLTAGE VARIABLE FREQUENCY 3-PHASE ASYNCHRONOUS MOTORS

概述　General Introduction

D1ZP系列冶金及起重用变频调速三相异步电动机是以变频调速装置为供电电源的调速三相异步电动机，与变频装置组成的系统能够实现无级变速；达到节能和控制自动化的目的。由于具有效率高、调速范围广、精度好、起制动运行稳定，且过载能力大的特点，特别适用于需要变频调速，短时或断续周期运行、频繁起制动的场合。电动机基本技术要求符合IEC34-1和GB755标准的要求，安装尺寸符合IEC71国际标准。

电动机可附装热保护器、加热器、编码器、电磁制动器、超速开关及测速发电机等附加装置，以满足用户配套需求。

D1ZP series metallurgcal industrial & crane vrane variable voltage variable frequency 3-phase asynchronous motors are driven by variable frequency inverters. The system comprising of a frequency inverter can give step-less speed regulation, and enable energy saving and automatic control. Because D1ZP series motors feature high efficiency, wide rang of regulating speeds, high precision, reliable starting and braking, and excellent overload capability, it is especially suited for working conditions and environment which variable frequency, short duty cycle needed, or on equipments with frequent starting and braking. The basic technical standards comply with standard IEC34-1 and GB755. The mounting dimensions and arrangement are fully conformed with the standard IEC72.

D1ZP series electric motors can equiped with thermostators, belt-heater, encoder,magnetic-braker,over-speed switch and techogenerator and other accesssaries to meet the customers requirement.

型号说明 Symbol explanation

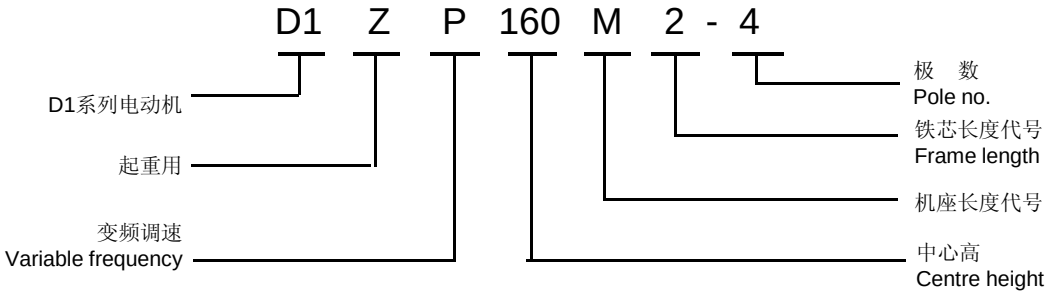

使用条件及其性能 Working conditions and performance

- 适应变频器输出的高载波频率电压。
  Has the adaptability to high carrier frequency voltage suppliece by inverter.
- 额定电压380V，额定频率50Hz。
  The rated power supply is 380V 50Hz.
- 绝缘等级F级，防护等级IP54、IP55。
  The insulation class is F, the protection degree is IP54 or ip55.
- 调速范围3Hz-100Hz；3-50Hz为恒转矩运行，50-100Hz为恒功率运行。
  The speed continously in the range of 3-100Hz; 3-50Hz forconstant torque operation, and 50-100Hz for constant out-put opration.
- 海拔不超过1000m，相对湿度不大于90%。
  The altitude of below 1000m above sea level. Relative humidity is less than 90%.
- 冷却方式：112-160M1机座号为自扇冷(IC411)，160M2-355机座号为他扇冷(IC416)。
  Mode of cooling: Frame 112-160M1 cooling use form of fan cooling(IC411).
  Frame 160M2-355 cooling use form of Separate-cooling(IC416).
- H180及以下机座号为Y接法，H200及以上机座为△接法。
  UP to frame H180 is Y connection, Frame H200 and up wards is △ connection.
- 额定电压、频率时，能承受额定转矩2倍过载历时1min。
  At the rated voltage and frequency, the motor can bear 2 times overload of the rated torque lasts 1 min.

电动机的工作制 Motors Duty

电动机适用于断续周期性工作制，根据负荷的不同性质，电动机的工作制分为：
These motors are well suited to intermittent heavy duty operation.It can be classified into the following categories according to different loading characteristics:

1.短时工作制（S2）：在恒定负载下按给定时间运行，未达到热稳定状态时即停机和断能一段时间，使电机再度冷却到与冷却介质温度之差在2K以内。
Short Time Duty(S2): Operation is under constant loading within limited period and the motor is resting or keeping motionless when the heat balance is not reached,to keep the difference of the cooling temperature and the medium materials temperature within 2K.cooled and the temperature difference between motor and medium is limited within 2K.

2.断续周期性工作制（S3）：按一系列相同的工作周期运行，每一周期由一段恒定负载运行时间和一段停机和断能的时间所组成，但这些时间较短，均不足以使电机达到热稳定状态，并且每一周期的起动电流对温升无明显的影响。
Intermittent Periodic Duty(S3):To run according to a series of identical cycles,the running time under constant load and the time of rest deenergized are included in period of one cycle(see Fig.1),but the time is shorter and does not make motor to a heat balance condition.The starting current shouldn't be enough to affect the temperature rise obviously.

3.包括起动的断续周期性工作制（S4）：按一系列相同的工作周期运行，每一周期由一段起动时间，一段恒定负载运行时间，一段停机和断能时间所组成；但这些时间较短，均不足以使电机达到热稳定状态。
Intermittent Periodic Duty with starting(S4):To run according to a series of identical cycles, each cycle is formed by a starting time,a constant load's time & a rest or deenergized time.But the time is short without condition making motor to a heat balance.

4. 包括电制动的断续周期性工作制（S_5）：按一系列相同的工作周期运行，每一周期由一段起动时间，一段恒定负载运行时间，一段停机和断能时间所组成；但这些时间较短，均不足以使电机达到热稳定状态。
Intermittent Periodic Duty with starting and Electric Braking(S_5):It runs according to a series of identical cycles, there are starting time,constant load's time,electric quick braking time and a rest or de-energized time in each cycle.But the motor can not reach the condition of heat balance in such short time.
5. 选用电机时，各种起动及制动状态均需按等效发热折算成每小时等效起动次数，以该等效起动次数确定电动机的定额。折算典型例子见表6。
When you choose motor,Various conditions of starting and braking have o be contained into a equivalent data of starts/hour accoding to equivalent heat, then the motor quota is determin -ed by the equivalent data.The conversion is shown in table 6.
6. 折算的方法 Conversion
6. 1点动终了时电动机的转速不超过额定转速的25%，即四次相当于一次起动。
When the touch starting is end, the speed dose not exceed 25% of rated speed,i.e.four times equal once of starting.
6. 2电制动（制动到额定转速的1/3）一次相当于0. 8次起动。
Once eletric braking (to brake to one third of rated speed) is equal to 80% starting.
7. 电动机的基准工作制为S_3 40%，（6次/时），见表8。
The duty type S_3-40% is basic duty,(6times/h),see table8.
8. 如果用户不指定工作制时，电动机铭牌上仅给出基准工作制时的数据，当电动机需要按其他工作制运行时，电动机功率可按表7中系数折算。（此系数及表8数据均为计算设计值，仅供用户选型时参考）
If the duty type is not appointed,the data on the name plate only under basic duty.If you need the other duty type,power conversion according to table7.(This conversion and table 8 are theory data,only provide reference for the customer.

等效起动次数与点动、制动及起动次数对应关系

Relations of equivalent staring number with touch starting、braking and starting number

表6 Table6

工作制 Dutytype	起制动状态 Starting & Braking Condition				每小时等效起动次数 Equivalent starts/h
	每小时起动次数 NO.of starts/h	每小时点动次数 NO.of touch starts/h	每小时制动次数 NO.of brakes/h	每小时制动并反转次数 NO.ofbrakes & reverses/h	
S_3	6	0	0	0	6
S_3	4	8	0	0	
S_3	2	8	2	0	
S_4	150	0	0	0	150
S_4	100	200	0	0	
S_5	80	0	80	0	
S_5	65	130	65	0	
S_5	30	160	30	30	
S_4	300	0	0	0	300
S_4	200	400	0	0	
S_5	160	0	160	0	
S_5	130	260	130	0	
S_5	60	320	60	60	
S_4	600	0	0	0	600
S_4	400	800	0	0	
S_5	320	0	320	0	
S_5	260	520	260	0	
S_5	120	640	120	120	

不同工作制下功率折算表
Power conversion according to different duty

表7　Table7

工作制	S_3				S_2		S4和S5　S4 and S5	
Duty	15%	25%	40%	60%	30 分 钟 30minutes	60 分 钟 60minutes	150次 / 时 150stars/h	300次 / 时 300stars/h
功率折算系数 Conversion	1. 35	1.10	1.0	0.8	1.10	1.0	0.83	0.73

D1ZP系列技术数据
D1ZP seies Technical data

表8　Table8-1

型号 TYPE	标称功率 Rated power KW	额定电流 Rated current A	额定转矩 Rated torque N·M	额定转速 Rated speed r/min	堵转转距 额定转距 Lockedorque Ratedtorque （3Hz）	最大转距 额定转距 maxtorque Ratedtorque （50Hz）	转动惯量 Moment of inertia kg·m2	重量 Netweight kg
D1ZP112M-4	4.0	9.5	26	1415	1.22	3.0	0.0175	55
D1ZP132S-4	5.5	12.2	36	1450	1.25	3.1	0.048	78
D1ZP132M-4	7.5	16.9	48	1450	1.25	3.2	0.056	92
D1ZP160M-4	11	23	71	1465	1.40	3.4	0.11	115
D1ZP160L-4	15	30	96	1465	1.40	3.5	0.125	130
D1ZP180M-4	22	43	141	1460	1.42	3.3	0.35	205
D1ZP200L_1-4	30	57	192	1470	1.45	3.5	0.263	280
D1ZP200L_2-4	37	70	236	1470	4.36	3.2	0.273	300
D1ZP225M-4	45	84	288	1475	1.55	3.3	0.469	325
D1ZP250M-4	55	102	352	1475	1.31	3.0	0.66	427
D1ZP280S_1-4	75	136	478	1475	1.45	3.0	1.12	565
D1ZP280S_2-4	90	165	575	1475	1.43	3.0	1.15	572
D1ZP280M-4	110	202	703	1480	1.60	3.3	1.46	677
D1ZP315S-4	132	243	845	1485	2.10	3.2	3.11	867
D1ZP315M_1-4	160	288	1020	1485	2.20	3.3	3.62	1023
D1ZP315M_2-4	200	360	1282	1485	2.20	3.1	4.13	1092
D1ZP315L-4	220	396	1409	1485	2.10	3.0	4.94	1161
D1ZP355M-4	250	440	1593	1480	2.25	3.1	5.75	1720
D1ZP355L-4	315	550	2008	1480	2.25	3.1	6.79	1870

续表8　　Table8-2

型号 TYPE	标称功率 Rated power KW	额定电流 Rated current A	额定转矩 Rated torque N·M	额定转速 Rated speed r/min	堵转转距 额定转距 Lockedorque Ratedtorque （3Hz）	最大转距 额定转距 maxtorque Ratedtorque （50Hz）	转动惯量 Moment of inertia kg·m2	重量 Netweight kg
D1ZP112M-6	2.2	6.0	21.5	930	1.25	3.0	0.020	55
D1ZP132S-6	3	7.5	29	960	1.35	3.1	0.0525	80
D1ZP132M$_1$-6	4	9.8	38.5	960	1.35	3.1	0.0562	92
D1ZP132M$_2$-6	5.5	12.7	53	960	1.35	3.1	0.0575	97
D1ZP160M-6	7.5	18	72	970	1.36	3.0	0.1325	132
D1ZP160L-6	11	26	106	970	1.40	3.1	0.1775	152
D1ZP180L-6	15	34	145	975	1.35	3.2	0.31	220
D1ZP200L$_1$-6	22	45	211	980	1.36	3.3	0.315	250
D1ZP200L$_2$-6	30	60	290	980	1.34	3.0	0.361	290
D1ZP225M-6	37	73	355	982	1.25	3.0	0.547	318
D1ZP250M-6	45	85	432	982	1.33	2.6	0.834	430
D1ZP280S-6	55	104	529	985	1.42	3.0	1.39	550
D1ZP280M-6	75	143	720	985	2.1	3.1	1.65	620
D1ZP315S-6	90	170	862	985	2.1	3.1	4.11	870
D1ZP315M$_1$-6	110	206	1055	985	2.15	3.2	4.778	1025
D1ZP315M$_2$-6	132	246	1271	985	2.2	3.0	5.45	1098
D1ZP315L-6	160	297	1540	985	2.3	3.0	6.12	1165
D1ZP355M$_1$-6	200	369	1913	980	2.3	3.5	8.02	1690
D1ZP355M$_2$-6	220	403	2103	980	2.3	3.5	9.63	1730
D1ZP355L-6	250	450	2390	980		3.5	10.54	1820
D1ZP160L-8	7.5	19	97	730	1.25	2.8	0.1775	152
D1ZP180L-8	11	26	141	735	1.39	3.1	0.325	220
D1ZP200L-8	15	35	192	735	1.50	3.1	0.339	260
D1ZP225S-8	22	50	282	735	1.46	2.9	0.491	270
D1ZP225M-8	30	68	386	735	1.47	2.9	0.547	292
D1ZP250M-8	37	76	473	735	1.28	2.8	0.834	405
D1ZP280S-8	45	93	575	735	1.39	3.0	1.39	520
D1ZP280M-8	55	121	703	735	1.27	2.9	1.65	592
D1ZP315S-8	75	158	960	735	1.7	3.1	4.79	1000
D1ZP315M$_1$-8	90	182	1152	735	2.0	3.1	5.58	1100
D1ZP315M$_2$-8	110	220	1416	735	2.0	3.0	6.37	1160
D1ZP315L-8	132	269	1692	735	1.98	2.9	7.23	1230
D1ZP355M$_1$-8	160	320	2038	745	2.1	2.9	9.4	1690
D1ZP355M$_2$-8	200	393	2548	745	2.1	2.9	11.38	1790
D1ZP355L-8	220	425	2803	745	2.1	2.9	13.8	1990
D1ZP400L$_1$-8	250	461	3197	745	2.2	3.3	33.3	3050
D1ZP400L$_2$-8	335	618	4286	745	2.2	3.3	33.3	3050
D1ZP280S-10	37	93	594	585	1.25	3.0	3.88	590
D1ZP280M-10	45	112	723	585	1.25	3.0	4.12	590
D1ZP315S-10	55	124	881	585	1.9	3.3	4.79	970
D1ZP315M$_1$-10	75	168	1203	585	1.9	3.2	6.37	1130
D1ZP315M$_2$-10	90	198	1445	585	2.0	3.2	7.15	1210
D1ZP315L-10	110	230	1769	585	1.82	3.0	7.25	1230
D1ZP355M$_1$-10	132	277	2103	585	2.1	2.7	10.9	1680
D1ZP355M$_2$-10	160	333	2548	585	2.1	2.7	13.7	1730
D1ZP355L-10	200	418	3185	585	2.1	2.7	15.8	1990
D1ZP400L-10	220	475	3521	590	2.2	3.3	26.1	2700

冷却风机参数　Blower data

表9　Table9

电动机机座号 Frame size	160	180	200	225	250	280	315	355	400
风机电机功率(w) Blower power	90	100	150	200	320	370	500	250/600	550
风机风量(m^3/h) Quantity of wind	1100	1200	2500	3800	4200	5000	6000	4700/6500	5000
转速（r/min） Speed	1400	1400	1400	1400	1400	1400	1400	900/1400	900
风机输入 Blower input	AC380V.50HZ								

注：接线时注意风扇的旋转方向应与风机罩上的标记一致。

Plase take notice to the fan's rotating direction, It is must be alike with the sign on the cover of the Blower.

外形及安装尺寸 Dimensions

D1ZP系列冶金及起重用变频调速三相异步电动机外形及安装尺寸与D1TP系列相同。

常用结构安装型式与适用的机座号见表1。常用安装型式与适用机座号的安装轴伸尺寸见表4。电动机的出现盒标准位置在电动机的上部。根据需要也可以安装在右侧或左侧（从轴伸端视之），但需定货时提出。电动机标准轴伸为直轴伸，如需要锥形轴伸需在定货时提出（尺寸见表5）。电动机总长尺寸在安装附件后有加长变化。

Dimensions and the arrangement of D1ZP series metallurgical industrial & crane variable voltage variable frequency 3-Phase asynchronous motors are teh same as D1TP series electric motors.

The commonly used mounting arrangements and the corresponding frame numbers are shown in table 1.

The commonly used mounting arrangements and the corresponding frame numbers for shaft dimensions are shown in Table 4. The normal position of the terminal box is on the top. But may be arranged on the right-hand side or the left-hand side(Looking at the driving end of the motor). The normal shaft extension is straight,but the cone shaft extension is available on

订货须知 Ordering information and notices

1、订货时必须说明产品型号、额定功率、额定转速、电压及频率和安装型式等。

When ordering, please specify: Types of motor, rated output, speed, voltage, frequency and mounting arrangement.

2、如有特殊要求，经双方协议后，可提供其它极数、其它结构及安装型式的电动机，也可以配带测速发电机、光电编码器、电磁制动器、电加热器、热传感器，还可以为用户研制其它额定电压、频率和频率范围的变频电动机。

If any special requirement is needed. The different pole number, construction and mounting arrangement are provide, we can also fit tachogenerator, optical encoder, electromagnetic brake and electrical heater and heat sensor. We can also undertake design to customer's specific

YGP系列辊道用变频调速三相异步电动机

YGP SERIES ROLLER-WAY VARIABLE VOLTAGE & FREQUENCY 3-PHASE ASYNCHRONOUS MOTOR

概述 General Introduction

YGP系列辊道用变频调速三相异步电动机是在YG系列三相异步电动机的基础上，扩大变频调速范围、增大机座号与功率等级，专为冶金行业利用变频调速方式驱动辊道设计的。该系列电机过载能力、机械强度高、调速范围广，既适合于连续运转的传送辊道，也适合于频繁起动和正反转的工作辊道。

YG系列电机机座号为H112～225，输出转矩为8～240Nm，变频范围5～80HZ；而YGP系列电机机座号为H112～400，输出转矩为7～2400Nm，变频范围1～100HZ，可直接输出低转速大转矩直接驱动辊子。

YGP series roller transit variable frenquency control 3-Phase asynchronous motor is designed on the base of the YG series electric motor by increasing range of the regulation,enlarging the frame size and the output degree,specially designed for driving the roller with the frequency invert in the field of the metallurgy.This series of motor posses the excellent capability for overload, machinery force and widely range of regulation speeds,which suited for carrying rollers both under constant and bi-directional rotation transmission with frequently starting and re-starting.

Frame size of YG Series motor are H112～225, output torque 8～240Nm, regulation range: 5～80HZ; Frame size for YGP series electric motor are H112～400, output torque 7～2400Nm, regulation range 1～100HZ, and thus it can drive the roller directly by starting with big torque and low speeds.

型号说明 Symbol explanation

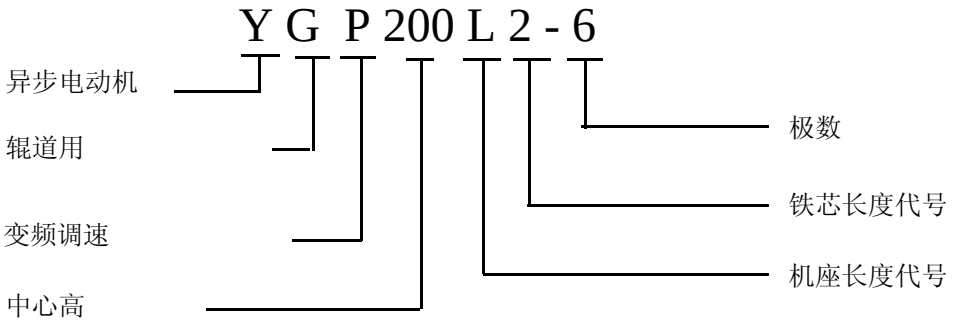

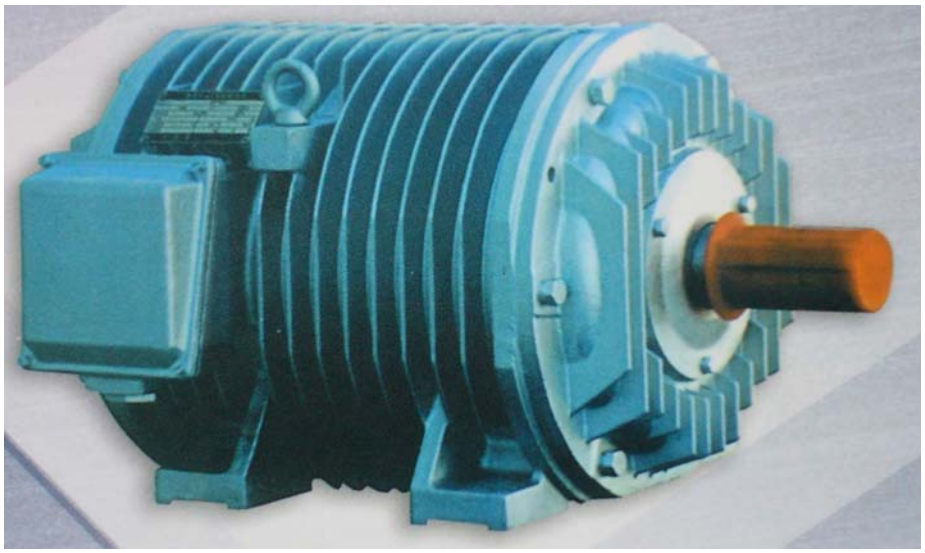

主要性能 Main features

1、额定电压380V，额定频率50HZ。也可根据需要确定电压、频率，如：380V.15HZ，660V.20HZ等；

Rated voltage 380V, rated frequency 50HZ. Special voltage and frequency can be arranged when ordering, such as 380V 15HZ, 660V 20HZ,etc.

2、电动机变频范围1~100HZ，1~50HZ为恒转矩调速，50~100HZ为恒功率调速。也可以根据需要确定变频范围；

Regulation rang 1～100HZ,constant torque regulation range 1～50, constant output regulation range 50～100HZ, special requirement can be meet when ordering.

3、电动机可在S1～S9工作制下运行。数据表中功率为S1连续工作制下的功率，仅供用户选型时参考；

The motor works under working mode S1～S9.Output data in the data table are continous service duty S1.

4、电动机绝缘等级为H级，防护等级为IP54，也可以制成IP55、IP56、IP65；冷却方式为IC410（表面自然冷却）；

Insulation degree H, protection degree IP54, other degree of protectionIP55,IP56,IP65 are also available, the cooling method IC410(Self surface cooling).

5、接线盒位置：H112～225从传动端看，在机座左侧；H250～400在非传动端机座顶部。

Position of terminal box: On the left from the driving end of the shaft for frame size H112～225,for frame size H250～400 the terminal-box on top of the non-driving end.

结构及安装型式 Structure and mounting mode

电动机有三种安装型式，均为卧式安装：

There are three constructional arrangements,all are horizontal arrangements:

B3：机座带底角，端盖无凸缘（H112～400）

B3: Farme with feet, without flange on the endshield.

B5：机座无底角，端盖有凸缘（H112～225）

B5: Frame without feet,with flange on the endshield

B35：机座带底角，端盖有凸缘（H112～400）

B35: Frame with feet,with flange on the endshield.

电机可按要求安装光电编码器、电磁制动器等。

Motor can be fitted with optical encoder and eletronmagnetic brake, etc.

技术数据 Technology data

表10 Table10-1

型 号 Type	功 率 Output （kW）	电 流 Current （A）	转 距 Torque （N.m）	转 速 Speed （r/min）	堵转转矩 额定转矩 Locked Torque Rated Torque	最大转矩 额定转矩 Marx Torque Rated Torque	转动惯量 Moment of inertia （kg·m²）	重 量 Weight （kg）
YGP112L1-4	1.1	2.5	7.3	1450	1.5～2.2 （1HZ）	4.0 （50HZ）	0.0112	57
YGP112L2-4	1.5	3	10	1450			0.0166	66
YGP132M1-4	2.2	4.5	14.5	1450			0.0251	90
YGP132M2-4	3	6	20	1450			0.0333	98
YGP160S1-4	4	8	26.2	1460			0.0646	131
YGP160S2-4	5.5	11	36	1460			0.0841	142
YGP160L1-4	7.5	14.5	49.1	1460			0.114	172
YGP160L2-4	9	17	59	1465			0.139	190
YGP180L1-4	11	20.5	71.7	1465			0.158	229
YGP180L2-4	15	28	97.8	1470			0.175	252
YGP200L1-4	18.5	33.5	120	1470			0.263	302
YGP200L2-4	22	40	142.7	1475			0.3	337
YGP225M1-4	25	44.5	162	1475			0.469	410
YGP225M2-4	30	54.5	194	1475			0.495	445
YGP250M-4	37	65.5	239	1480			0.66	500
YGP280L1-4	45	79	290	1485			1.46	700
YGP280L2-4	55	96	355	1485			1.825	800
YGP280L3-4	75	129	484	1485			2.19	1000
YGP315L1-4	90	154	579	1490			4.13	1098
YGP315L2-4	110	188	708	1490			4.94	1165
YGP355M1-4	132	224	846	1490			7.53	1200
YGP355M2-4	160	275	1025	1490			7.72	1500
YGP400L1-4	200	350	1279	1494			11.0	2000
YGP400L2-4	250	440	1604	1494			13.5	2300
YGP112L1-4	1.75	2	7.4	965			0.0112	57
YGP112L2-6	1.1	2.7	11	965	1.5～2.0 （1HZ）	3.8 （50HZ）	0.0166	66
YGP132M1-6	1.5	3.4	15	965			0.0251	90
YGP132M2-6	2.2	4.8	22	965			0.0333	98
YGP160S1-6	3	6.5	29.5	970			0.0646	131
YGP160S2-6	4	8.5	39.4	970			0.0841	142
YGP160L1-6	5.5	11.5	54	970			0.114	172
YGP160L2-6	7.5	15	73.5	975			0.139	190
YGP180L1-6	9	17.5	88.1	975			0.158	229
YGP180L2-6	11	21.5	107.8	975			0.175	252
YGP200L1-6	15	28.5	147	975			0.263	302
YGP200L2-6	18.5	34	181	975			0.3	337
YGP225M1-6	22	40	215	975			0.469	410
YGP225M2-6	25	46	245	975			0.469	445
YGP250M-6	30	54.5	292	980			0.66	500
YGP280L1-6	37	67	359	985			1.46	700
YGP280L2-6	45	81	436	980			1.825	800
YGP280L3-6	55	97	533	985			2.19	1000
YGP315L1-6	75	134	724	990			4.13	1098
YGP315L2-6	90	162	868	990			4.94	1165
YGP355M1-6	110	197	1061	990			7.53	1200
YGP355M2-6	132	235	1273	990			7.72	1500
YGP400L1-6	160	290	1537	990			11.0	2000
YGP400L2-6	200	360	1922	990			13.5	2300

技术数据 Technology data

续表10 Table10-2

型 号 Type	功 率 Output （kW）	电 流 Current （A）	转 距 Torque （N.m）	转 速 Speed （r/min）	堵转转矩 额定转矩 Locked Torque Rated Torque	最大转矩 额定转矩 Marx Torque Rated Torque	转动惯量 Moment of inertia （kg·m^2）	重 量 Weight （kg）
YGP112L1-8	0.55	1.6	7.3	725	1.5～2.2 （1HZ）	4.0 （50HZ）	0.0112	57
YGP112L2-8	0.75	2	10	725			0.0166	66
YGP132M1-8	1.1	3.2	14.5	725			0.0251	90
YGP132M2-8	1.5	4.3	20	725			0.0333	98
YGP160S1-8	2.2	5.5	30	725			0.0646	131
YGP160S2-8	3	7	39.5	725			0.0841	142
YGP160L1-8	4	9.5	52.7	725			0.114	172
YGP160L2-8	5.5	13	72.5	725			0.139	190
YGP180L1-8	7.5	17	98	730			0.237	229
YGP180L2-8	9	20	117.7	730			0.294	252
YGP200L1-8	11	25	143	735			0.36	302
YGP200L2-8	15	30	185	735			0.509	337
YGP225M1-8	18.5	38	240	735			0.547	410
YGP225M2-8	22	45	286	735			0.623	445
YGP250M-8	25	49	325	735			0.834	500
YGP280L1-8	30	60	390	735			1.65	700
YGP280L2-8	37	72	481	735			2.06	800
YGP280L3-8	45	87	585	735			2.48	1000
YGP315L1-8	55	96	710	740			5.45	1098
YGP315L2-8	75	142	968	740			6.12	1165
YGP355M1-8	90	168	1161	740			9	1300
YGP355M2-8	110	210	1419	740			11	1500
YGP400L1-8	132	260	1692	745			18.8	2000
YGP400L2-8	160	320	2051	745			23	2300
YGP132M1-10	0.75	2.5	12.4	580	1.5～2.0 （1HZ）	3.8 （50HZ）	0.0251	90
YGP132M2-10	1.1	4	18	580			0.0333	98
YGP160S1-10	1.5	5	24.6	580			0.0646	131
YGP160S2-10	2.2	7.2	36	580			0.0841	142
YGP160L1-10	3	9.8	49.2	580			0.114	172
YGP160L2-10	4	12	66	580			0.139	190
YGP180L1-10	5.5	14	90	585			0.237	229
YGP180L2-10	7.5	19	122.4	585			0.294	252
YGP200L1-10	9	23	147	585			0.36	302
YGP200L2-10	11	26	176	585			0.509	337
YGP225M1-10	15	34	245	585			0.547	410
YGP225M2-10	18.5	41	302	585			0.623	445
YGP250M-10	22	48	359	585			0.834	500
YGP280L1-10	25	54	405	590			1.65	700
YGP280L2-10	30	67	486	590			2.06	800
YGP280L3-10	37	77	599	590			2.48	1000
YGP315L1-10	45	92	728	590			5.45	1098
YGP315L2-10	55	114	890	590			6.12	1165
YGP355M1-10	75	165	1204	595			9	1300
YGP355M2-10	90	185	1445	595			11	1500
YGP400L1-10	110	215	1767	595			18.8	2000
YGP400L2-10	132	265	2120	595			23	2300

技术数据 Technology data

续表10 Table10-3

型 号 Type	功 率 Output （kW）	电 流 Current （A）	转 距 Torque （N.m）	转 速 Speed （r/min）	堵转转矩 额定转矩 Locked Torque Rated Torque	最大转矩 额定转矩 Marx Torque Rated Torque	转动惯量 Moment of inertia （kg·m²）	重 量 Weight （kg）
YGP132M1-12	0.55	2.5	10.8	485	1.5～2.0 （1HZ）	3.6 （50HZ）	0.0251	90
YGP132M2-12	0.75	3.5	14.8	485			0.0333	98
YGP160S1-12	1.1	5	21.7	485			0.0646	131
YGP160S2-12	1.5	6.3	29.5	485			0.0841	142
YGP160L1-12	2.2	8.8	43.3	485			0.114	172
YGP160L2-12	3	12	59	485			0.139	190
YGP180L1-12	4	13.5	79	485			0.237	229
YGP180L2-12	5.5	17	108.5	485			0.294	252
YGP200L1-12	7.5	23	148	485			0.36	302
YGP200L2-12	9	25	177	485			0.509	337
YGP225M1-12	11	30	217	485			0.547	410
YGP225M2-12	15	42	295	485			0.623	445
YGP250M-12	18.5	47.5	361	490			0.834	500
YGP280L1-12	22	54	429	490			1.65	700
YGP280L2-12	25	62	487	490			2.06	800
YGP280L3-12	30	70	585	490			2.48	1000
YGP315L1-12	37	88	721	490			5.45	1098
YGP315L2-12	45	105	877	490			6.12	1165
YGP355M1-12	55	130	1062	495			9	1300
YGP355M2-12	75	175	1448	495			11	1500
YGP400L1-12	90	185	1738	495			18.8	2000
YGP400L2-12	110	220	2124	495			23	2300
YGP160S1-16	0.75	4.5	19.9	360	1.5～2.0 （1HZ）	3.0 （50HZ）	0.0646	131
YGP160S2-10	1.1	6.5	29.2	360			0.0841	142
YGP160L1-16	1.5	9	39.7	360			0.114	172
YGP160L2-16	2.2	12	54.2	360			0.139	190
YGP180L1-16	3	16	78.5	365			0.237	229
YGP180L2-16	4	20	105	365			0.294	252
YGP200L1-16	5.5	26	144	365			0.36	302
YGP200L2-16	7.5	31	196	365			0.509	337
YGP225M1-16	9	36	236	365			0.547	410
YGP225M2-16	11	42	288	365			0.623	445
YGP250M-16	15	48	393	365			0.834	500
YGP280L1-16	18.5	60	484	365			1.65	700
YGP280L2-16	22	68	576	365			2.06	800
YGP280L3-16	25	80	654	365			2.48	1000
YGP315L1-16	30	99	785	365			5.45	1098
YGP315L2-16	37	120	968	365			6.12	1165
YGP355M1-16	45	142	1162	370			9	1300
YGP355M2-16	55	165	1420	370			11	1500
YGP400L1-16	75	190	1936	370			18.8	2000
YGP400L2-16	90	210	2323	370			23	2300

B3型外形及安装尺寸　B3 Outline and mounting dimensions

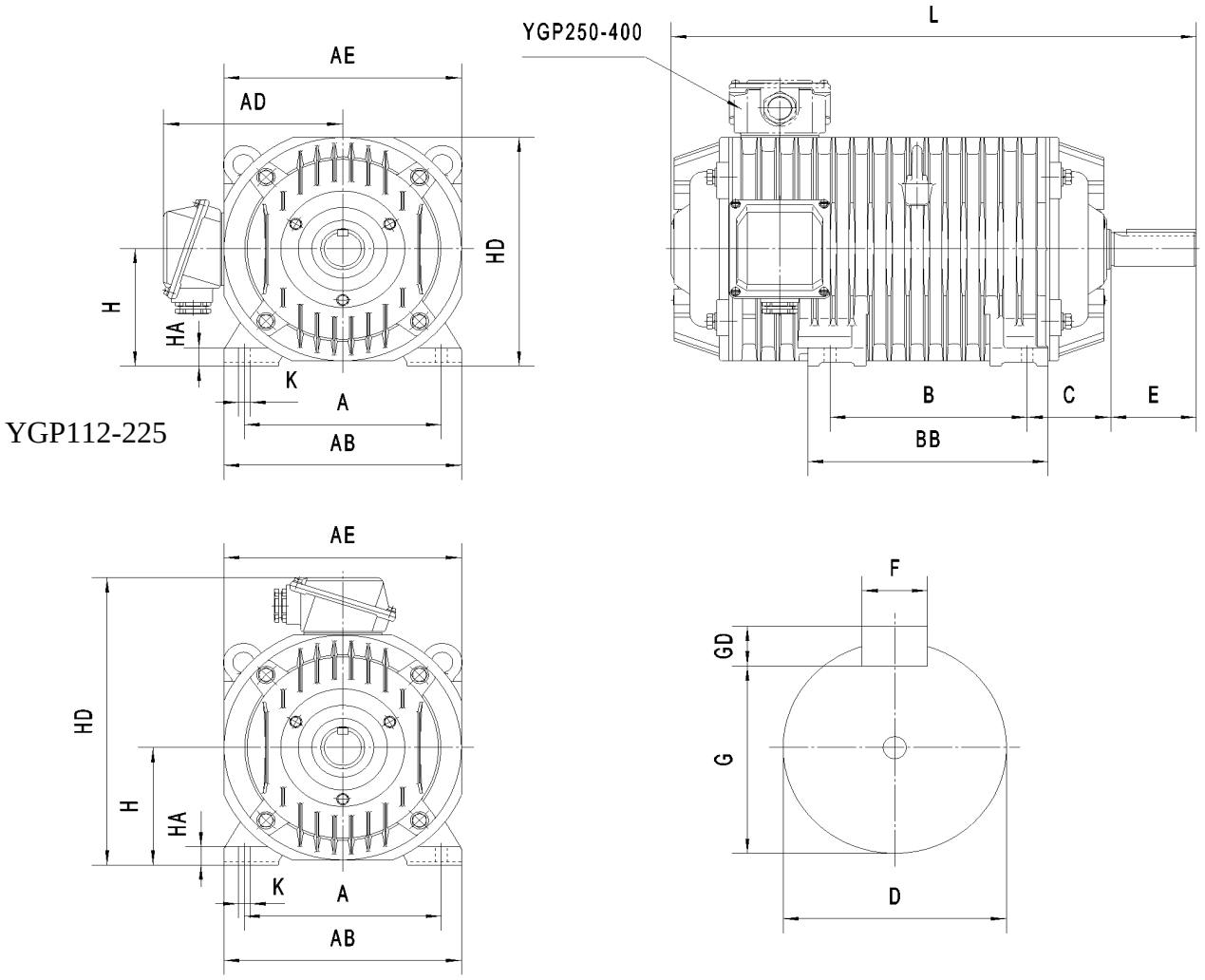

表11　B3型外形及安装尺寸　Table11 B3 Outline and mounting dimensions

机座号 Frame No.	安装尺寸 Mounting dimensions										外形尺寸 Outline dimensions						
	A	B	C	D	E	F	G	GD	H	K	AB	AD	AE	BB	HA	HD	L
112L	190	159	70	32k6	80	10	27	8	112	12	235	205	240	200	18	235	445
132M	216	178	89	38k6			33		132		265	220	265	220	22	270	500
160S	254		108	48k6	110	14	42.5	9	160	15	315	245	315	243	25	320	565
160L		254												316			685
180L	279	279	121	55m6		16	49	10	180		360	290	365	325		365	730
200L	318	305	133	65m6	140	18	58	11	200	19	415	320	420	365		415	780
225M	356	311	149	75m6		20	67.5	12	225		465	345	470	395	35	465	840
250M	406	349	168						250	24	490	-	490	458		620	900
280L	457	500	190	80m6		22	71	14	280		560	-	560	705	38	720	1100
315L	508	560	216	90m6	170	25	81		315	28	640	-	640	770	40	790	1200
355M	610		254	110m6	210	28	100	16	355		740	-	740	700		860	1300
400L	686	710	280	130m6	250	32	119	18	400	35	850	-	775	915	55	960	1400

B5型外形及安装尺寸　B5 Outline and mounting dimensions

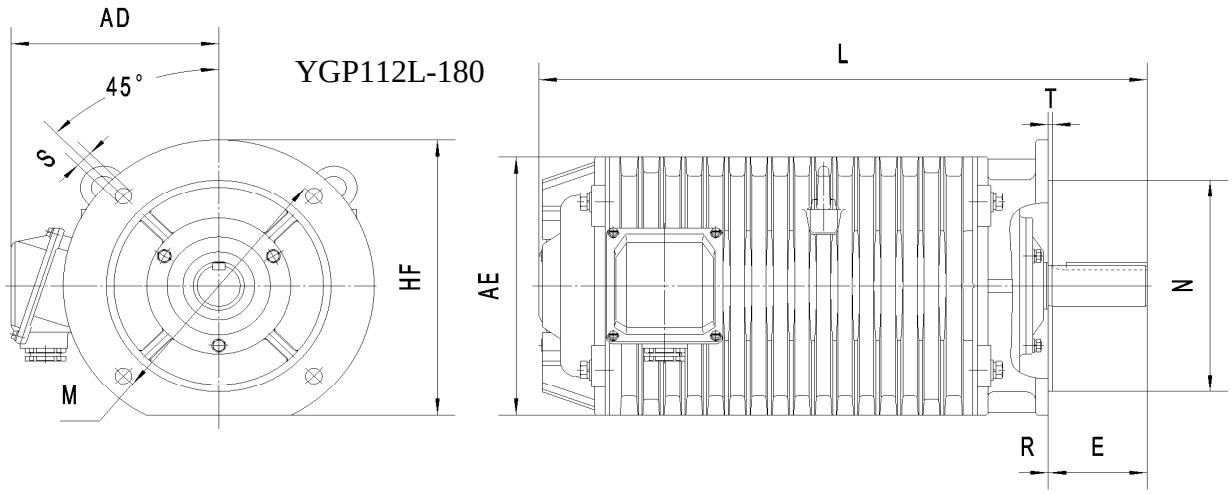

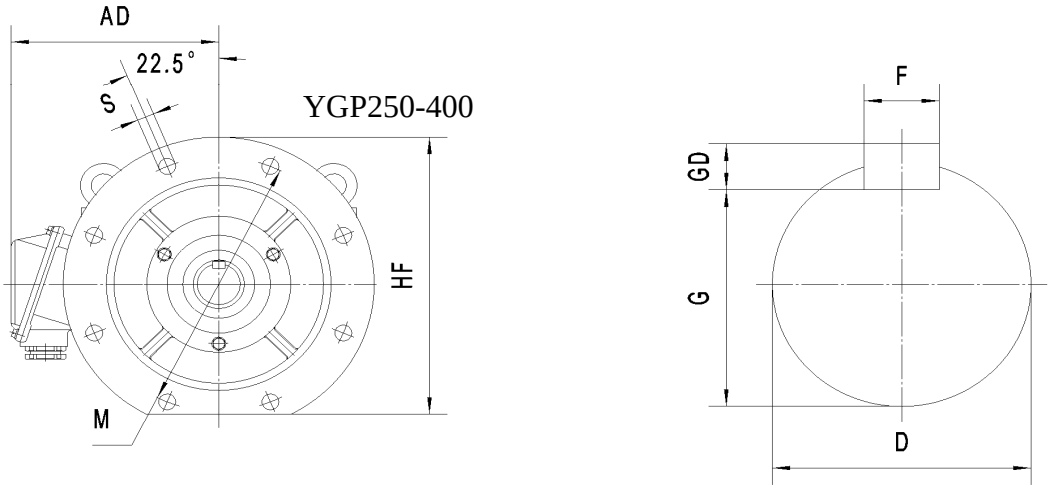

表12　B5型外形及安装尺寸　Table11　B5 Outline and mounting dimensions

机座号 Frame No.	安装尺寸 Mounting dimensions								外形尺寸 Outline dimensions						
	D	E	F	G	GD	M	N	P	R	S	T	AE	AD	HF	L
112L	32k6	80	10	27	8	215	180j6	250	0	15	4.0	240	205	235	445
132M	38k6			33		265	230j6	300				265	220	280	500
160S	48k6	110	14	43	9	300	250j6	350		19	5.0	315	245	335	565
160L															685
180L	55m6		16	49	10							365	290	360	730
200L	65m6	140	18	58	11	400	350j6	450				420	320	455	780
225M	75m6		20	68	12							470	345	460	840

B35型外形及安装尺寸 B35 Outline and mounting dimensions

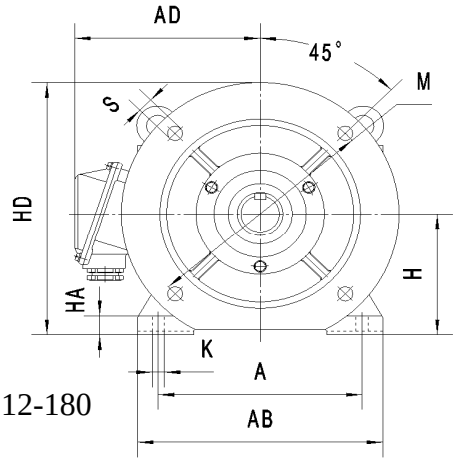

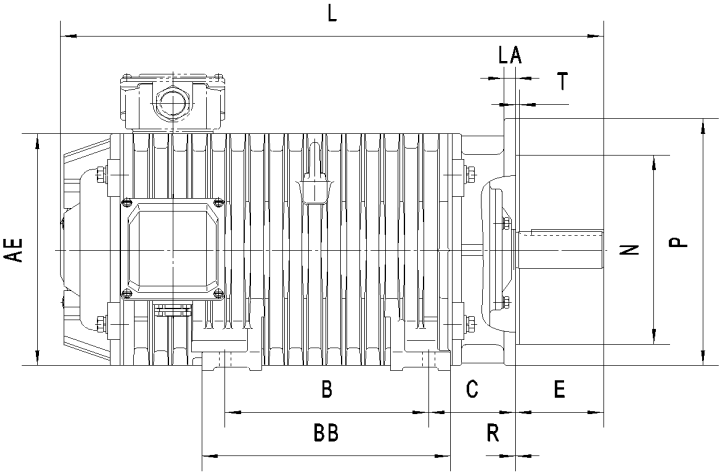

YGP112-180

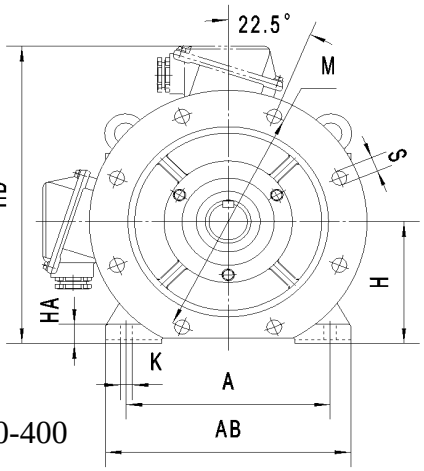

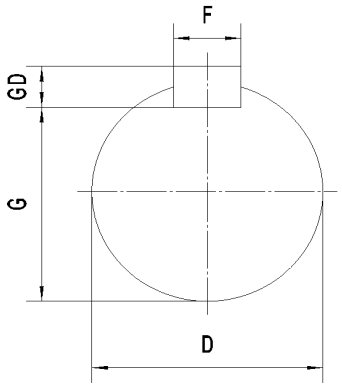

YGP250-400

表13　B35型外形及安装尺寸　Table13 B35 Outline and mounting dimensions

机座号 Frame No	安装尺寸 Mounting dimensions																外形尺寸 Outline dimensions							
	A	B	C	D	E	F	G	GD	H	K	M	N	P	R	S	T	AB	AD	AE	BB	HA	HD	LA	L
112L	190	159	70	32k6	80	10	27	8	112	12	215	180j6	250	0	15	4.0	235	205	240	200	18	235	15	445
132M	216	178	89	38k6			33		132		265	230j6	300				265	220	265	220	22	270		500
160S	254		108	48k6	110	14	43	9	160	15	300	250j6	350		19	5.0	315	245	315	243	25	320		565
160L		254																		316				685
180L	279	279	121	55m6		16	49	10	180								360	290	365	325		365	18	730
200L	318	305	133	65m6	140	18	58	11	200	19	400	350j6	450				415	320	420	365		415	20	780
225M	356	311	149	75m6		20	68	12	225								465	345	470	395	35	465	22	840
250M	406	349	168						250	24	500	450j6	550				490	-	490	458		620	24	900
280L	457	500	190	80m6		22	71	14	280								560	-	560	705	38	720		1100
315L	508	560	216	90m6	170	25	81		315	28	600	550js6	660		24	6	640	-	640	770	40	790	26	1200
355M	610		254	110m6	210	28	100	16	355		740	680js6	800				740	-	740	700		860	28	1300
400L	686	710	280	130m6	250	32	119	18	400	35							850	-	775	915	55	960		1400